Glass aquariums

These high quality glass aquariums are extremely solid with a one-piece framing and welded with specially adapted silicone. Other aquarium dimensions available upon request.

ITEM	EXT. DIMENSIONS	VOLUME	PRICE
18227	12” x 6” x 8”	9.5 liters (2.5 gal.)	21.84 $
13044	16” x 8” x 10”	20.8 liters (5.5 gal.)	24.01 $
59197	20” x 10” x 12”	37.8 liters (10 gal.)	28.97 $
59198	24” x 12” x 12”	56.8 liters (15 gal.)	61.84 $
59201	20” x 10” x 24”	75.7 liters (20 gal.)	95.66 $
59199	24” x 12” x 16”	75.7 liters (20 gal.)	61.78 $
59200	30” x 12” x 12”	75.7 liters (20 gal.)	69.01 $
59202	30” x 12” x 18”	110 liters (29 gal.)	99.88 $
59204	24” x 12” x 24”	114 liters (30 gal.)	127.37 $
59203	36” x 12” x 16”	114 liters (30 gal.)	121.46 $
59206	48” x 13” x 12”	125 liters (33 gal.)	155.46 $
56414	20” x 20” x 20”	132 liters (35 gal.)	121.48 $
59207	30” x 12” x 24”	140 liters (37 gal.)	166.01 $
59208	36” x 18” x 16”	151 liters (40 gal.)	165.93 $
59209	48” x 13” x 16”	151 liters (40 gal.)	175.90 $
59210	36” x 12” x 24”	167 liters (44 gal.)	222.95 $
59211	36” x 18” x 18”	189 liters (50 gal.)	204.61 $
59212	48” x 13” x 20”	208 liters (55 gal.)	193.54 $
59213	36” x 18” x 24”	246 liters (65 gal.)	240.91 $
59214	48” x 18” x 20”	284 liters (75 gal.)	249.83 $
59215	36” x 18” x 30”	318 liters (84 gal.)	576.21 $
59216	48” x 18” x 24”	340 liters (90 gal.)	387.59 $
59217	48” x 18” x 30”	416 liters (110 gal.)	598.54 $
59218	48” x 24” x 24”	454 liters (120 gal.)	664.09 $
4497	60” x 18” x 25”	454 liters (120 gal.)	664.02 $
4042	72” x 18” x 24”	511 liters (135 gal.)	758.79 $
59219	48” x 24” x 30”	568 liters (150 gal.)	849.11 $
56070	72” x 24” x 24”	681 liters (180 gal.)	1 559.63 $
56071	72” x 24” x 30”	852 liters (225 gal.)	1 986.98 $

High-quality aquariums

These aquariums are black colored by default. Other colors (white, grey) available for several models (upon request).

23260

44670
44678
44686
73187

73191
44662

73149
73152

ITEM	EXT. DIMENSIONS	VOLUME	PRICE
44670	24” x 16” x 22”	104 liters (27.5 gal.)	374.36 $
44662	39” x 16” x 16”	123 liters (32.5 gal.)	344.16 $
23260	24” x 20” x 54”	129 liters (34 gal.)	1 634.23 $
44678	32” x 16” x 22”	138 liters (36.5 gal.)	413.04 $
73191	48” x 15” x 16”	172 liters (45.5 gal.)	455.13 $
44686	40” x 16” x 24”	195 liters (51.5 gal.)	553.90 $
73187	48” x 16” x 24”	231 liters (61 gal.)	623.18 $
73149	51” x 30” x 22”	307 liters (81 gal.)	1 425.45 $
73152	39” x 39” x 22”	312 liters (82.5 gal.)	1 603.25 $

Custom-made acrylic & glass aquariums

At Aquamerik, we can build reliable and long-lasting aquariums made of acrylic and glass on special request based on the information provided by the customer.

Please contact us in order to determine the dimensions and volume required for your aquarium.

Frame seafood tanks

These frame seafood tanks with glass windows were designed for those who are looking for a simple and effective solution to keep without any stress their seafoods with the **commercial tanks**, or simply to present their products in an elegant way with the **front profiled tanks**. Their designs make it very simple to connect with the majority of already existing refrigerating or autonomous systems.

The tanks are made of stainless steel that resist against corrosion caused by salt water. Our units use environmentally friendly refrigerant giving you and your customer's peace of mind.

The heights (h1 / h2 / h3) are add up to give the total height in the item table.

Front profiled tank

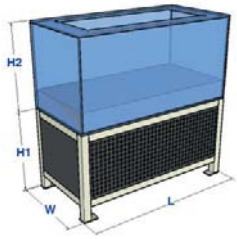

Commercial tank: simple level

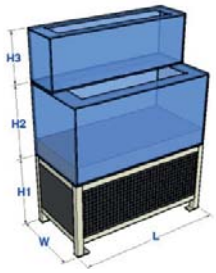

Commercial tank: double level

ITEM	DIMENSIONS (le. x wi. x he.)	VOLUME	VOLTS (amps)	PRICE
FRONT PROFILED TANKS - DOUBLE LEVEL				
NO-SSP244	48" x 54" x 48"	235 gal us	115 (20)	10 634.40 $
NO-SSP246	72" x 54" x 48"	350 gal us	115 (20)	14 022.40 $
NO-SSP248	96" x 54" x 48"	450 gal us	220 (20)	16 632.00 $
FRONT PROFILED TANKS - TRIPLE LEVEL				
NO-SSP344	48" x 54" x 64"	300 gal us	220 (20)	11 704.00 $
NO-SSP346	72" x 54" x 64"	450 gal us	220 (15)	13 916.00 $
NO-SSP348	96" x 54" x 64"	625 gal us	220 (20)	18 928.00 $
COMMERCIAL TANKS - SIMPLE LEVEL				
NO-SSS124	48" x 24" x 48"	100 gal us	115 (15)	P.O.R.
NO-SSS126	72" x 24" x 48"	150 gal us	115 (15)	P.O.R.
NO-SSS128	96" x 24" x 48"	200 gal us	115 (15)	P.O.R.
NO-SSS134	48" x 36" x 48"	150 gal us	115 (15)	P.O.R.
NO-SSS136	72" x 36" x 48"	225 gal us	115 (20)	P.O.R.
NO-SSS138	96" x 36" x 48"	300 gal us	115 (20)	P.O.R.
NO-SSS144	48" x 48" x 48"	200 gal us	115 (15)	P.O.R.
NO-SSS146	72" x 48" x 48"	300 gal us	115 (20)	P.O.R.
NO-SSS148	96" x 48" x 48"	400 gal us	220 (15)	P.O.R.
COMMERCIAL TANKS - DOUBLE LEVEL				
NO-SSS224	48" x 24" x 64"	150 gal us	115 (15)	P.O.R.
NO-SSS226	72" x 24" x 64"	235 gal us	115 (20)	P.O.R.
NO-SSS228	96" x 24" x 64"	320 gal us	115 (20)	P.O.R.
NO-SSS234	48" x 36" x 64"	235 gal us	115 (20)	P.O.R.
NO-SSS236	72" x 36" x 64"	350 gal us	115 (20)	P.O.R.
NO-SSS238	96" x 36" x 64"	450 gal us	220 (20)	P.O.R.
NO-SSS244	48" x 48" x 64"	300 gal us	115 (20)	P.O.R.
NO-SSS246	72" x 48" x 64"	450 gal us	220 (15)	P.O.R.
NO-SSS248	96" x 48" x 64"	625 gal us	220 (20)	P.O.R.

Cabinet style seafood tanks

These tanks have a high density and were built to resist all impacts. They are equipped with double pane acrylic windows to prevent condensation. These cabinets are ideal for lab settings but also for decoration in restaurants or seafood markets. Tanks also available in these versions: metal laminated, UV sterilizer, dividers and bumpers. "LD" = 2 systems in 1 divided cabinet. Casters for tanks also available.

NO-2L/3L/4L

ITEM	DIMENSIONS (le. x wi. x he.)	VOLUME	VOLTS (amps)	PRICE
NO-2L	48" x 32" x 53"	100 us gal	115 (7.4)	8 750.70 $
NO-3L	72" x 32" x 53"	160 us gal	115 (9.3)	9 914.94 $
NO-4L	96" x 32" x 53"	210 us gal	115 (15.0)	11 299.68 $
NO-2LD	48" x 32" x 65"	130 us gal	115 (9.3)	12 083.40 $
NO-3LD	72" x 32" x 65"	240 us gal	115 (15.0)	14 931.00 $
NO-UVS	UV sterilizer for seafood tanks.			604.80 $
NO-DM	Main-tank divider for seafood tanks.			63.00 $
NO-DT	Top-tank divider for seafood tanks (NO-2LD/3LD).			50.40 $
NO-AP	Air pump for seafood tanks (with air stones).			1 127.70 $
NO-OC	Casters for seafood tanks.			P.O.R.

Commercial seafood tanks

Our commercial tanks for seafood preservation are perfect to minimize the required time for maintenance. Each tank is protected with perforated PVC panels, a foam filter pad, and a nylon netting (over the perforated sheet) that prevents any filter material from entering the void area and the suction line. The commercial sets are shipped with the tanks, mechanical filter (3 layers), recirculating pump and the cooling unit. We can also put together custom-made sets for your specific applications.

40 & 120-watt UV sources available upon request.

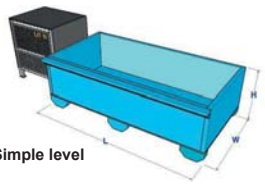

Simple level

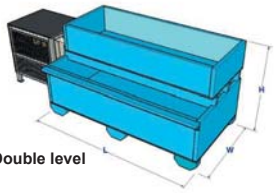

Double level

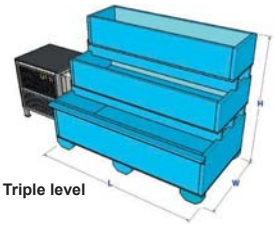

Triple level

ITEM	DIMENSIONS (le. x wi. x he.)	VOLUME (us GAL)	VOLTS (amps)	PRICE
SIMPLE LEVEL				
NO-FSR1406	72" x 48" x 23"	250 (@ 20")	115 (15)	15 576.00 $
NO-FSR1408	96" x 48" x 23"	350 (@ 20")	115 (20)	17 635.00 $
NO-FSR1410	120" x 48" x 23"	450 (@ 20")	220 (15)	19 993.00 $
DOUBLE LEVEL				
NO-FSR2406	72" x 48" x 54"	500 us gal	220 (15)	P.O.R.
NO-FSR2408	96" x 48" x 54"	652 us gal	220 (15)	P.O.R.
NO-FSR2410	120" x 48" x 54"	800 us gal	220 (20@1ø)	P.O.R.
TRIPLE LEVEL				
NO-FSR3406	72" x 48" x 78"	650 us gal	220 (15)	P.O.R.
NO-FSR3408	96" x 48" x 78"	900 us gal	220 (20@1ø)	P.O.R.
NO-FSR3410	120" x 48" x 78"	1150 us gal	220 (20@1ø)	P.O.R.
NO-FSR3610	120" x 72" x 78"	1500 us gal	220 (25@1ø)	P.O.R.

Polyethylene semi-square tanks

Total tank drainage | Very smooth surface | Disinfects easily | Quick and easy setup | Optimize the available space | Easy to transport | Use little quantity of water

The polyethylene semi-square tanks give maximum volume of water by surface of area used. These polyethylene tanks are specially conceived according to very specific criterias, like the ease of use, self-cleaning, all of this at an affordable price. They have been used for many years in fish farming, universities and research centers. Hundreds of tanks are used in fish farming across the country.

Tank stand: white painted steel. Available in 304 or 316 stainless steel on special order.

Available: navy blue, gray (standard) and black.

Tank stand

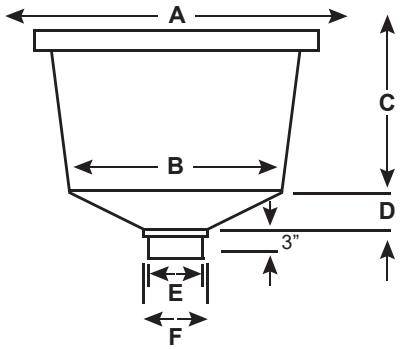

ITEM	A	B	C	D	E	F	VOLUME	TANK	*STAND
SST-2618	26"	22"	18"	4"	7"	9"	190 L (50 us gal)	237.00 $	234.00 $
SSIT-2612	Can be inserted in tank SST-2618						95 L (25 us gal)	190.50 $	N/A
COVER	26"	--	--	--	--	--	--	94.50 $	N/A
ANGLED BOTTOM									
SST-3127	31"	29"	27"	3.5"	7"	9"	416 L (110 us gal)	427.50 $	282.00 $
SST-4222	42"	38"	22"	4.5"	7"	9"	681 L (180 us gal)	522.00 $	373.50 $
SST-6228	62"	58"	28"	9"	11.5"	13.5"	1703 L (450 us gal)	1 188.00 $	766.50 $
FLAT BOTTOM									
SSFB-2720	26"	--	20"	--	6"	--	190 L (50 us gal)	237.00 $	N/A
SSFB-3226	31"	--	26"	--	7"	--	380 L (100 us gal)	427.50 $	N/A

(*) Replace "SST" by "SSS" in the code if you wish to order the tank stand (ex. "SST-2618" = "SSS-2618").

Steel tanks with membrane

These low cost steel tanks are solid and can be moved anywhere. They certainly are the ones you need. AQUAMERIK manufactures and supplies these circular steel tanks. No other system gives you the steel resistance with the protection of a membrane, ideal and economical. 14 or 16 gage of canadian steel depending of the tank size.

You can easily carry the parts in your aquaculture by a conventional door and two persons can assemble many tanks in the same day. Available in different sizes thus they can reach up with your needs whenever it's used as a self-cleaning tank, a head reservoir or a feed retention tank.

Prices include all necessary material you need for setup: bolts, nuts, "Fish Grade" membrane (30 mm), extruded aluminum to hold the membrane and assembly plan. Our membranes for tanks (available in dark gray or black) are approved for fish applications in aquaculture. Other types of membranes are also available (ie. white, approved for drinking water). Available with 42 (**"-42"**) or 48 (**"-48"**) inches of wall height (see price columns in the tab) and we can also do custom-made models for all size (P.O.R.).

ITEM	Ø	US GAL	M^3	HEIG. "-42"	HEIG. "-48"
FULL TANK SET (GALVANIZED PANEL + GRAY MEMBRANE)					
AQC-9	9'	1667	6.3	3 024.82 $	3 299.66 $
AQC-12	12'	2964	11.2	4 033.09 $	4 399.55 $
AQC-15	15'	4631	17.5	5 041.36 $	5 499.42 $
AQC-18	18'	6668	25.2	6 049.63 $	6 599.31 $
AQC-21	21'	9076	34.4	7 057.91 $	7 699.20 $
AQC-24	24'	11,854	44.9	8 066.18 $	8 799.08 $
AQC-30	30'	18,522	70.1	10 082.71 $	10 998.86 $
REPLACEMENT MEMBRANE					
AQC-9T	9'	--	--	885.23 $	962.21 $
AQC-12T	12'	--	--	1 236.42 $	1 331.54 $
AQC-15T	15'	--	--	1 251.47 $	1 337.77 $
AQC-18T	18'	--	--	1 433.18 $	1 522.75 $
AQC-21T	21'	--	--	1 714.50 $	1 812.47 $
AQC-24T	24'	--	--	2 127.36 $	2 015.40 $
AQC-30T	30'	--	--	2 771.17 $	2 897.14 $

ABB project (Ontario) / made by Aquamerik

Circular tanks with conical-bottom

These economical tanks have all the benefits of our flat-bottom tanks with the advantage of a conical bottom. A 20 degree cone-bottom forces high solids to be removed from the bottom continuously. This allows our tanks to be self-cleaning for months. Round sump measures 14” of diameter. Standard color is gray, also available in blue and black.

AQUAMERIK offers you the biggest polyethylene tank selection in Canada.

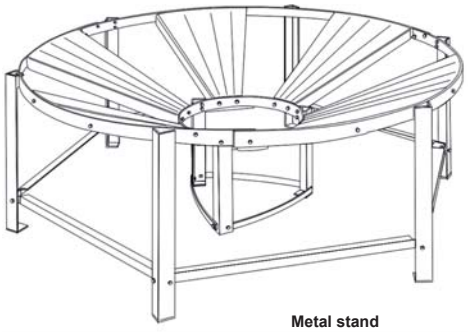

Metal stand

*** 10% discount for 4 and more.**

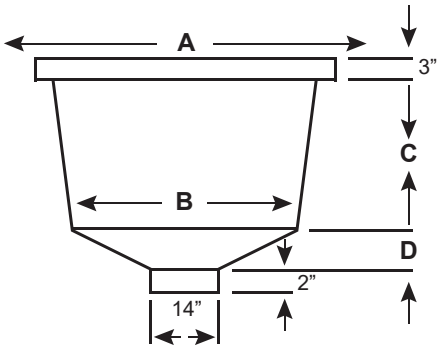

ITEM	A	B	C	D	VOLUME	PRICE
CIRCULAR TANKS						
CB-6028	60”	50”	28”	10”	946 liters (250 us gal.)	475.50 $
CB-7530	75”	65”	30”	13”	1703 liters (450 us gal.)	903.00 $
CB-8530	85”	75”	30”	14”	2460 liters (650 us gal.)	949.50 $
CB-9636	96”	84”	36”	17”	3595 liters (950 us gal.)	1 567.50 $
CB-10260	102”	80”	60”	10”	5677 liters (1500 us gal.)	1 900.50 $

STANDS FOR TANKS		
CBS-6028P	Plastic stand for CB-6028 (250 gal).	570.00 $
CBS-6028	Steel stand painted white for CB-6028 (250 gal).	856.50 $
CBS-7530	Steel stand painted white for CB-7530 (450 gal).	1 818.00 $
CBS-8530	Steel stand painted white for CB-8530 (650 gal).	2 202.00 $
CBS-9636	Steel stand painted white for CB-9636 (950 gal).	2 796.00 $
CBS-10260	Steel stand painted white for CB-10260 (1500 gal).	2 796.00 $

Drain kits for polyethylene tanks

Venturi drains are specially designed for our polyethylene tanks. These “PVC” kits are manufactured to fit on tanks outlets. A technician will be happy to help you to find the model that suits your application.

Ask about our dual-drain control level systems.

TSST series

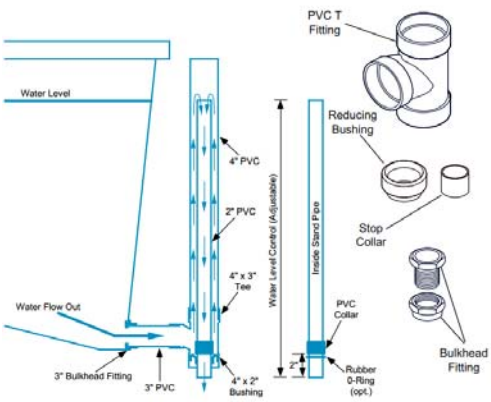

SV series

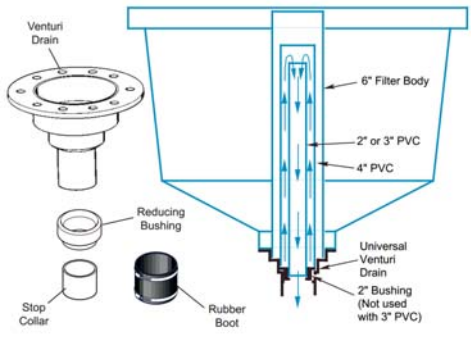

VD series

ITEM	DESCRIPTION	PRICE
TSST-2618	Side sump for SST-2618.	72.50 $
TSST-4222	Side sump for SST-4222.	93.90 $
TSST-6228	Side sump for SST-6228	174.36 $
SV-300	Side venturi for PT-302.	94.50 $
SV-500	Side venturi for PT-304.	105.00 $
SV-800	Side venturi for PT-306.	114.00 $
SV-1200	Side venturi for PT-308.	142.50 $
VD-24	5cm (2”) x 10cm (4”), Venturi drain.	297.00 $
VD-246	5cm (2”) x 10cm (4”) x 15cm (6”), Venturi drain.	331.50 $

Tanks

Polyethylene tanks (conical)

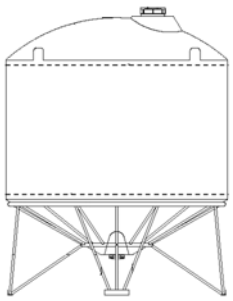

Multiple uses for these conical tanks, through the particles filter to the Artemia incubator. A 18" diameter cover is screwed on the top and provides free access to the inside. Treated against UV radiations for outdoor uses. An area in the bottom allows the installation of a polyethylene tank coupling (available at Aquamerik).

Specific density of 1.5 sg by default (1.9 and 2.2 sg also available). **Optional stand also available.** (**CBO**: Open top / **CBC**: Closed top)

ITEM	Ø x HEIGHT	LITERS	IMP. GAL.	CONE ANGLE	PRICE
10849	18¾" x 21"	68	15	55°	P.O.R.
10925	24" x 29"	136	30	63°	P.O.R.
10983	32" x 34"	363	80	50°	P.O.R.
CBO-30	16" x 61"	136	30	30°	237.98 $
CBO-45	22" x 61"	200	45	30°	269.10 $
CBO-125	30" x 70"	560	125	17°	604.10 $
CBO-250	40" x 86"	1100	250	30°	860.38 $
CBO-500	55" x 91"	2200	500	20°	1 885.52 $
CBO-750	70" x 87"	3400	750	17°	2 553.69 $
CBO-1000	70" x 106"	4500	1000	17°	3 624.59 $
CBC-860	64" x 119"	3800	850	45°	P.O.R.
CBC-1260	64" x 157"	5600	1250	45°	P.O.R.
CBC-1690	90" x 125"	7600	1665	30°	P.O.R.
CBC-2090	90" x 148"	9500	2100	30°	P.O.R.
CBC-2490	90" x 167"	11,300	2500	30°	P.O.R.
CBC-3690	90" x 222"	16,800	3700	30°	P.O.R.
CBO-5040	142" x 159"	22,700	5000	30°	P.O.R.
CBO-6140	142" x 183"	27,700	6100	30°	P.O.R.
CBC-9640	142" x 238"	43,800	9600	30°	P.O.R.

Cone-bottom cylindrical tanks

These tanks have the same features as the flat bottom tanks with an added bonus – the bottom is cone-shaped for total drainage. These tanks must be supported with some types of stand. **PT-301**, **312** and **314** have a 15° cone. **PT-300**, **302** to **308** and **316** have a 45° cone. In stock, in black, available in gray, natural or blue. **Price for lid and support on demand.**

ITEM	Ø x HEIG.	DEPTH	LITERS	US GAL	PRICE
PT-300	15" x 26"	16"	57	15	90.00 $
PT-301	15" x 21"	16"	57	15	90.00 $
PT-302	18" x 38"	27"	114	30	169.50 $
PT-304	22" x 44"	31"	209	55	282.00 $
PT-306A	24" x 52"	38"	304	80	451.50 $
PT-307	36" x 33"	20"	360	95	508.50 $
PT-308A	28" x 58"	42"	456	120	541.50 $
PT-312A	41" x 50"	42"	950	250	1 240.50 $
PT-314	52" x 72"	64"	1900	500	1 692.00 $
PT-316	48" x 72"	48"	1900	500	1 861.50 $

Polyethylene tanks

These polyethylene, marine blue, open top tanks are economical with long life expectancy. The smooth surface makes for easy cleaning, and their light weight allows for quick set-up and relocation.

ITEM	SHAPE	Ø x DEPTH	CAPACITY	PRICE
PEN-TP55	Round	21" x 38"	55 gal	249.93 $
PEN-TP90	Round	39" x 20"	90 gal	393.74 $
PEN-TP210	Round	48" x 30"	210 gal	519.57 $
PEN-TP250	Round	60" x 22"	250 gal	717.31 $
PEN-TP110	Rectangular	55" x 31" x 18" H*	110 gal	447.67 $
PEN-TP130	Concave style	72" x 36" x 12" H*	130 gal	465.64 $

(*) H = height

Polyethylene circular tanks

These polyethylene circular tanks are used for hundreds of applications around the world. They are by far the most economical tanks to be used in aquaculture. Available in: blue, gray, black (standard: gray). In option, we can install an observation window for your tank.

- Flat-bottom, so you don't need any stand.
- Many specific configuration on demand.
- To convey tank one inside another.
- We have the biggest inventory in Canada.
- We are the only distributor in Eastern Canada.

Square sump

Flat bottom

Round sump

Side sump

ITEM	DIAMETER	HEIGHT	CAPACITY (liters)	BOTTOM	PRICE
PT-3931	99 cm (39")	78 cm (31")	418 l. (110 gal. us)	Round sump (4"ø x ¾" deep)	379.20 $
PT-4822	122 cm (48")	56 cm (22")	473 l. (125 gal. us)	Flat bottom	427.50 $
PT-4825	122 cm (48")	64 cm (25")	570 l. (150 gal. us)	Round sump	427.50 $
PT-5228	132 cm (52")	71 cm (28")	681 l. (180 gal. us)	Square sump (12"x18"x6")	475.50 $
PT-5430	137 cm (54")	76 cm (30")	760 l. (200 gal. us)	Flat bottom	618.00 $
PT-6530	165 cm (65")	76 cm (30")	1135 l. (300 gal. us)	Flat bottom	760.50 $
PT-9016*	229 cm (90")	41 cm (16")	1135 l. (300 gal. us)	Flat bottom	760.50 $
PT-8030	203 cm (80")	76 cm (30")	1900 l. (500 gal. us)	Flat bottom	949.50 $
PT-9038	229 cm (90")	97 cm (38")	3028 l. (800 gal. us)	Side sump	1 234.50 $
PT-9650	243 cm (96")	127 cm (50")	4560 l. (1200 gal. us)	Flat bottom	1 663.50 $
SS-186	Square sump for circular tanks (22" x 18" x 7½" deep).				76.50 $
RS-102	Round sump for circular tanks (10"ø x 2" deep).				37.50 $

RS-102

SS-186

(*) Not to be used for breeding pond (embossed bottom)

Sun Lite clear tanks

Aquamerik is retailer of these reinforced clear tanks that let 90% of the light go through the tank. Used by many people in the aquaculture domain. The tanks, manufactured from a special material called Sun Lite, offer two major benefits: light can pass through the tanks and you can look at the inside if you need to inspect them. The unique Sun Lite material offers a robust product and resistance against degradation caused by ultraviolet rays, thanks to a special protector. Our lightweight tanks, available in various dimensions, are used for numerous cultures such as algae, artemia, fish, shellfish and as a lobster tank. We also deliver the Sun Lite biofilters for recirculation systems.

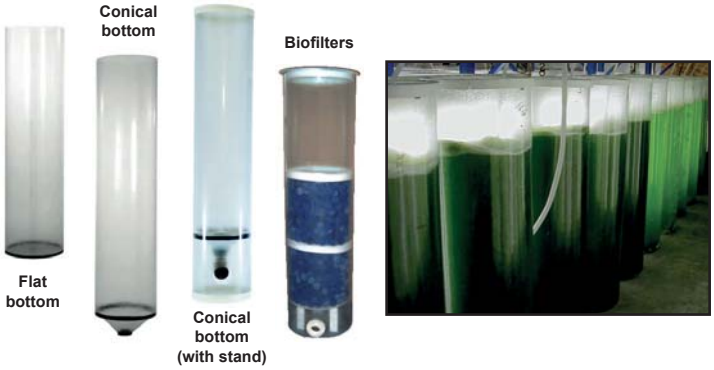

ITEM	Ø x HEIG.	VOLUME	WEIGHT	PRICE
FLAT BOTTOM TANKS				
SUNFP-1248	12" x 48"	87 l. (23 us gal)	8 lbs	226.86 $
SUNFP-1848	18" x 48"	166 l. (44 us gal)	12 lbs	295.66 $
SUNFP-1860	18" x 60"	250 l. (66 us gal)	16 lbs	324.30 $
SUNFP-1812	18" x 120"	500 l. (132 us gal)	19 lbs	428.46 $
SUNFP-5860	58" x 60"	2744 l. (725 us gal)	52 lbs	1 189.42 $
CONICAL BOTTOM TANKS				
SUNFC-1254	12" x 54"	95 l. (25 us gal)	10 lbs	485.58 $
SUNFC-1860	18" x 60"	257 l. (68 us gal)	18 lbs	630.06 $
CONICAL BOTTOM TANKS (WITH STAND)				
SUNAP-1263	12" x 63"	95 l. (25 us gal)	--	630.06 $
SUNAP-1880	18" x 80"	257 l. (68 us gal)	--	755.98 $
SUNAP-2483	24" x 83"	488 l. (129 us gal)	--	1 259.98 $
BIOFILTERS				
SUNBF-1248	12" x 48"	87 l. (23 us gal)	13 lbs	540.94 $

Fibreglass circular tanks

These fibreglass manufactured circular tanks are ideal for increasing your fish production. The laminated fibreglass stand (optional) underneath the circular tank allows for faster installation on a concrete floor. Available in isolated version and custom-made models for various projects. **Add "-S" after the code if you wish to order one of our tanks with the stand ("TANK + STAND" column).**

- Superior quality.
- Easy to maintain.
- Wide variety of colors.
- Waterproof against bacteria.
- Non-corrosive design.
- Ideal for plankton culture.
- Quantity discount available.
- **Shipping in extra**, F.O.B. manufacturer.

Tank + stand

KREISSEL65
(for larvas)

(*) Tank included with the stand.

ITEM	INSIDE DIAMETER	INSIDE HEIGHT	CAPACITY Liters	CAPACITY Imp gal.	TANK ONLY	TANK + STAND
BCF-276-72 (2 sections)	700 cm (276")	183 cm (72")	78 179	17 197	P.O.R.	P.O.R.
BCF-276-48 (2 sections)	700 cm (276")	122 cm (48")	48 307	10 626	P.O.R.	P.O.R.
BCF-192-72	500 cm (192")	183 cm (72")	29 040	6387	P.O.R.	P.O.R.
BCF-192-48	500 cm (192")	122 cm (48")	23 815	5238	P.O.R.	P.O.R.
BCF-138-66	350 cm (138")	167 cm (66")	16 000	3562	6 296.00 $	7 746.00 $
BCF-144-60	365 cm (144")	152 cm (60")	15 750	3464	7 968.00 $	18 106.00 $
BCF-132-60	335 cm (132")	152 cm (60")	13 061	2873	9 005.00 $	14 786.00 $
BCF-144-48	365 cm (144")	122 cm (48")	12 800	2825	7 033.50 $	8 650.80 $
BCF-132-48	335 cm (132")	122 cm (48")	10 374	2281	6 898.00 $	13 287.00 $
BCF-120-48	305 cm (120")	122 cm (48")	8636	1899	5 976.00 $	11 935.00 $
BCF-132-36	335 cm (132")	91 cm (36")	7722	1698	5 679.00 $	12 693.00 $
BCF-120-36	305 cm (120")	91 cm (36")	6686	1474	5 007.15 $	7 119.90 $
BCF-96-48	243 cm (96")	122 cm (48")	5434	1195	3 978.00 $	6 573.00 $
BCF-75-74	191 cm (75")	188 cm (74")	5310	1180	4 091.85 $	5 206.95 $
BCF-76-72	193 cm (76")	183 cm (72")	5000	1100	4 313.00 $	5 489.00 $
BCF-72-72	183 cm (72")	183 cm (72")	4839	1064	2 499.00 $	4 186.00 $
BCF-120-24	305 cm (120")	60 cm (24")	4250	934	4 186.00 $	8 620.00 $
BCF-72-48	183 cm (72")	122 cm (48")	3200	845	2 415.00 $	2 778.00 $
BCF-96-24	243 cm (96")	60 cm (24")	2705	595	2 716.00 $	4 948.00 $
BCF-70-40	178 cm (70")	102 cm (40")	2160	475	3 322.35 $	4 029.75 $
BCF-60-36	152 cm (60")	91 cm (36")	1588	349	1 780.00 $	1 978.00 $
BCF-72-24	183 cm (72")	60 cm (24")	1487	327	1 605.80 $	3 080.00 $
BCF-55-29*	140 cm (55")	75 cm (29½")	1000	220	N/A	1 909.65 $
BCF-51-29	130 cm (51")	74 cm (29")	906	200	1 518.75 $	2 277.45 $
BCF-60-24	152 cm (60")	60 cm (24")	709	155	1 245.00 $	2 315.60 $
BCF-48-30	122 cm (48")	76 cm (30")	890	196	1 695.70 $	2 574.00 $
BCF-47-24	119 cm (47")	61 cm (24")	679	150	1 436.40 $	2 134.35 $
BCF-42-21*	108 cm (42½")	55 cm (21-5/8")	500	110	N/A	1 104.45 $
BCF-34-21*	87 cm (34¼")	55 cm (21-5/8")	300	66	N/A	890.29 $
BCF-26-25	66 cm (26")	64 cm (25")	216	48	516.00 $	593.40 $
BCF-26-21*	66 cm (26")	55 cm (21¾")	163	36	N/A	719.77 $
BCF-24-21	61 cm (24")	53 cm (21")	153	34	405.00 $	431.50 $
BCF-30-18	76 cm (30")	45 cm (18")	143	31	589.25 $	N/A
KREISSEL65	57 cm (22-3/8")	43 cm (17")	65	17	849.00 $	N/A
BCF-17-22*	43 cm (17")	56 cm (22")	60	13	N/A	456.74 $
DR-K1	Kreissel outlet.				247.50 $	N/A

Cylindrical tanks

Aquamerik stocks an important quantity of cylindrical tanks for quick delivery. We can modify or add intakes depending on your needs. The natural color for these tanks is white, but they are also available in gray or blue. They are self-supporting when installed on a flat surface. Cover "**-C**" sold separately.

ITEM	Ø x H	IMP GAL	LITERS	TANK	COV. "-C"
PT-200	6" x 7"	0.6	3	21.50 $	10.50 $
PT-202	9" x 13"	2.5	11	45.00 $	15.75 $
PT-204	10" x 13"	2.5	11	45.00 $	15.75 $
PT-206	11" x 14"	3.3	15	57.00 $	21.15 $
PT-208	13" x 13"	5	23	57.00 $	26.40 $
PT-210	10" x 20"	5	23	67.50 $	26.40 $
PT-212	13" x 15"	6.6	30	79.50 $	28.50 $
PT-214	13" x 19"	8.3	38	112.50 $	31.65 $
PT-216	15" x 21"	12.5	57	112.50 $	36.90 $
PT-218	18" x 24"	21	95	135.00 $	36.90 $
PT-220	18" x 32"	25	114	169.50 $	42.15 $
PT-222	17" x 36"	28.3	129	180.00 $	36.90 $
PT-224	22" x 30"	43.3	197	249.00 $	73.80 $
PT-226	22" x 34"	46	208	282.00 $	73.80 $
PT-228	24" x 48"	66.6	303	394.50 $	84.30 $
PT-229	32" x 32"	91.5	416	508.50 $	137.10 $
PT-228A	28" x 48"	104	473	451.50 $	105.45 $
PT-229A	36" x 32"	108	492	564.00 $	158.25 $
PT-230	32" x 44"	116.5	530	586.50 $	137.10 $
PT-232	30" x 48"	125	568	621.00 $	115.95 $
PT-233	32" x 48"	137.4	625	666.00 $	137.10 $
PT-234	38" x 48"	175	795	766.50 $	189.75 $
PT-236	42" x 48"	229	1041	846.00 $	210.90 $
PT-238	44" x 46"	250	1136	1 354.50 $	263.70 $
PT-240	52" x 52"	375	1703	1 579.50 $	316.35 $
PT-242	52" x 62"	416	1892	1 692.00 $	316.35 $
PT-244	60" x 60"	625	2839	2 088.00 $	790.95 $

ACO series:

ITEM	Ø x H	IMP GAL	LITERS	TANK	COV. "-C"
OT-5	11" x 18"	5	22	76.89 $	36.61 $
OT-9	15" x 16"	9	40	95.19 $	N/A
OT-15	16" x 23"	15	68	122.65 $	42.10 $
OT-17	18" x 21"	17	77	120.82 $	51.26 $
OT-25	16" x 36"	25	113	151.94 $	42.10 $
OT-30	18" x 37"	30	136	153.77 $	49.43 $
OT-36	18" x 39"	36	163	194.04 $	49.43 $
OT-45	22" x 36"	45	204	245.30 $	60.41 $
OT-50	22" x 40"	50	227	283.74 $	60.41 $
OT-60	22" x 44"	60	272	311.20 $	60.41 $
OT-66	26" x 38"	66	300	292.90 $	64.07 $
OT-75	24" x 47"	75	340	347.81 $	64.07 $
OT-100	30" x 45"	100	454	446.67 $	86.04 $
OT-125	30" x 49"	125	568	549.18 $	86.04 $
OT-150	37" x 45"	150	681	576.64 $	128.14 $
OT-175	36" x 49"	175	795	633.39 $	128.14 $
OT-178	30" x 73"	178	809	713.93 $	128.14 $
OT-220	55" x 34"	220	1000	750.55 $	388.09 $
OT-240	43" x 50"	240	1091	823.77 $	183.06 $
OT-300A	48" x 50"	300	1363	1 061.75 $	329.51 $
OT-300B	55" x 41"	300	1363	1 070.90 $	366.12 $
OT-400	55" x 50"	400	1818	1 437.02 $	388.09 $
OT-500	55" x 62"	500	2273	1 729.92 $	388.09 $
OT-750	70" x 58"	750	3409	2 306.56 $	512.57 $
OT-1000	70" x 78"	1000	4546	2 800.82 $	512.57 $
OT-1250	70" x 93"	1250	5682	3 514.75 $	512.57 $

**** For ordering a tank cover, add "-C" after the item number of the main article for the PT and OT series. ****

Cylindrical tanks (continued)

RC series:

ITEM	Ø x HEIG.	IMP GAL	LITERS	PRICE
RC-4045	18" x 39"	30	136	228.71 $
RC-2301	24" x 21"	25	114	278.65 $
RC-2401	24" x 37"	50	227	332.54 $
RC-3101	30" x 47"	100	455	586.22 $
RC-3301	30" x 67"	150	682	653.28 $
RC-4201	48" x 50"	250	1137	775.50 $
RC-4301	48" x 58"	300	1364	954.26 $
RC-4401	48" x 64"	400	1818	1 207.94 $
RC-4501	48" x 90"	500	2273	1 339.37 $

Calibration reference:

ITEM	COMPATIBLE	IMP GAL	PRICE
10-1009A	Ø 30" Tank	100 - 250	267.12 $
10-1006A	Ø 48" Tank	250 - 500	283.50 $
10-1007A	Ø 48" Tank	750 - 950	417.06 $
10-1002A	Ø 72" Tank	1000	394.38 $
10-1109	Ø 90" Tank	1000	325.08 $
10-1209	Ø 90" Tank	2000	375.48 $
10-1309	Ø 90" Tank	3000	430.92 $

Cylindrical, flat bottom, vertical tanks with closed top and centered opening

Made from polyethylene resins approved for use in the food industry by the F.D.A. / U.S.D.A. and the canadian food inspection agency. The polyethylene used for these tanks is made by extrusion process, making them resistant against ultraviolet rays, which extend the lifespan of the tanks. No seal, no leaking. "**CH**" = cross shaped top, "**DT**" = dome shaped top.

ITEM	US GAL	LITERS	DIAM.	HEIG.	PRICE
CT-70	84	318	24"	50"	558.33 $
CT-100CH	120	454	30"	42"	604.10 $
CT-120	144	545	31"	56"	814.62 $
CT-150CH	180	681	30"	60"	842.08 $
CT-225CH	270	1022	31"	90"	1 153.28 $
CT-300CH*	360	1363	48"	59"	1 418.72 $
CT-310	372	1408	55"	45"	1 418.72 $
CT-400	480	1817	55"	56"	1 720.76 $
CT-450CH*	540	2044	48"	94"	1 867.21 $
CT-500CH*	600	2271	48"	97"	1 903.82 $
CT-510	612	2316	55"	72"	1 922.13 $
CT-600CH*	721	2729	48"	109"	2 205.87 $
CT-700CH*	841	3183	48"	123"	2 819.12 $
CT-805	967	3660	64"	91"	2 553.35 $
CT-1000	1201	4546	64"	104"	3 093.71 $
CT-1010	1213	4591	70"	82"	3 093.71 $
CT-1235	1483	5613	64"	123"	4 613.11 $
CT-1250	1501	5681	70"	99"	4 018.17 $
CT-1655	1988	7525	86"	104"	5 674.86 $
CT-1700	2042	7729	64"	162"	6 022.67 $
CT-2000	2401	9089	85"	117"	6 114.20 $
CT-2455	2948	11 159	90"	132"	7 731.23 $
CT-3305	3969	15 024	90"	166"	10 524.73 $
CT-3402	4083	15 455	102"	129"	P.O.R.
CT-4102	4984	18 866	102"	154"	P.O.R.
CT-4620	5524	20 910	120"	132"	P.O.R.
CT-4690	5524	20 910	90"	216"	P.O.R.
CT-5002	6005	22 700	102"	188"	P.O.R.
CT-5420	6485	24 548	120"	153"	P.O.R.
CT-6620	7926	30 003	120"	178"	P.O.R.
CT-7120	8526	32 274	120"	194"	P.O.R.
CT-7340	8767	33 186	142"	146"	P.O.R.
CT-8740	10 448	39 550	142"	169"	P.O.R.
CT-10440	12 490	47 279	142"	198"	P.O.R.
CT-12540	15 012	56 826	142"	234"	P.O.R.
CT-13740	16 513	62 508	142"	257"	P.O.R.

(*) Also available in "DT".

Cylindrical, flat bottom, vertical tanks with closed top & centered opening (continued)

ITEM	US GAL	LITERS	DIAM.	HEIG.	PRICE
04-2300	30	114	24”	22”	277.33 $
04-2403	60	227	24”	35”	352.84 $
04-2503	90	341	24”	51”	373.68 $
04-2603	120	455	24”	67”	555.95 $
04-3103	120	455	30”	43”	588.50 $
04-3100	120	455	30”	47”	610.64 $
04-3203	150	568	30”	53”	610.64 $
04-3303	180	682	30”	63”	653.60 $
04-3300	180	682	30”	67”	636.68 $
04-3503	240	909	30”	83”	726.52 $
04-3703	300	1137	30”	103”	749.95 $
04-4200	300	1137	48”	51”	760.37 $
04-4300	360	1364	48”	59”	880.15 $
04-4400	480	1818	48”	73”	1 129.07 $
04-4500	600	2273	48”	91”	1 162.67 $
04-8450	793	3000	63”	70”	1 798.06 $
04-4850*	900	3406	48”	131”	1 897.04 $
04-8650	1057	4000	63”	92”	1 954.30 $
04-4950*	1080	4088	48”	155”	1 954.30 $
04-7250*	1200	4542	72”	87”	2 307.14 $
04-9050*	1200	4542	90”	68”	2 692.54 $
04-9250*	2400	9084	90”	108”	3 769.29 $
04-9350*	3600	13 627	90”	155”	5 170.24 $

(*) Off-centered opening

Hauling tanks

04-3250
04-4250

04-1500

ITEM	US GAL	LITERS	DIMENSIONS	PRICE
04-3250	325	1227	62” x 33” / 2” drain	639.28 $
04-1500	417	1578	62” x 30” x 59”	1 722.55 $
04-4250	426	1614	62” x 39” / 2” drain	720.00 $

Rectangular tanks

Our rectangular tanks are manufactured in polyethylene with high quality materials and UV stabilizer. Some of them may need a metallic support for holding liquids (available on demand).

Lid also available for several model (quoted with an asterisk *).

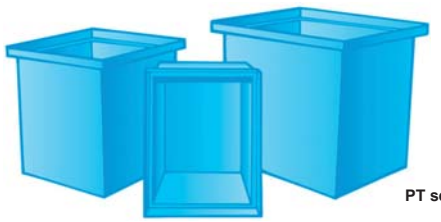

PT series

- **Available in: black, blue, gray or natural.**
- **Many other models available.**

ITEM	LENG. x WID. x HEIG.	IMP. GAL.	US GAL.	LITERS	PRICE
PT-500	3.5” x 18” x 24”	5	6	23	90.00 $
PT-501*	4” x 12.5” x 17”	3	3.5	13	73.50 $
PT-502	4” x 14” x 14”	2	3	11	51.00 $
PT-503	5” x 46” x 56”	46	55	208	316.50 $

Rectangular tanks (continued)

ITEM	LENG. x WID. x HEIG.	IMP. GAL.	US GAL.	LITERS	PRICE
PT-504*	4” x 18” x 18”	4	5	19	67.50 $
PT-506*	4.5” x 24” x 30”	10	12	45	169.50 $
PT-508	4.5” x 30” x 28”	13	16	61	202.50 $
PT-510	5” x 22” x 22”	8	10	38	102.00 $
PT-512	6” x 10” x 10”	2	2	8	39.00 $
PT-514*	6” x 16” x 11”	3	4	15	67.50 $
PT-516*	6” x 18” x 24”	9	11	42	147.00 $
PT-518	6” x 30” x 6”	3	4	15	67.50 $
PT-519	5” x 43” x 34”	25	30	114	282.00 $
PT-520*	8” x 30” x 36”	31	37	140	282.00 $
PT-522	8” x 26” x 26”	19	23	87	225.00 $
PT-524	10” x 18” x 27”	17	21	79	180.00 $
PT-526*	12” x 12” x 12”	6	7	26	79.50 $
PT-528	12” x 12” x 18”	9	11	42	112.50 $
PT-530	12” x 12” x 36”	18	22	83	225.00 $
PT-532*	12” x 18” x 12”	9	11	42	90.00 $
PT-534*	12” x 18” x 18”	13	16	61	135.00 $
PT-536*	12” x 18” x 24”	18	22	83	192.00 $
PT-538	12” x 18” x 36”	27	33	125	225.00 $
PT-540	12” x 24” x 30”	31	37	140	259.50 $
PT-542	12” x 26” x 18”	20	24	91	202.50 $
PT-544	12” x 30” x 12”	15	18	68	180.00 $
PT-546	12” x 30” x 24”	31	37	140	259.50 $
PT-548	12” x 30” x 30”	38	46	174	316.50 $
PT-550	13” x 23” x 21”	22	27	102	214.50 $
PT-552*	13” x 23” x 24”	26	31	117	225.00 $
PT-554	13” x 23” x 36”	38	46	174	294.00 $
PT-556	14” x 14” x 8”	5	6	23	90.00 $
PT-558	14” x 26” x 24”	31	37	140	259.50 $
PT-560*	14” x 26” x 26”	33	40	151	271.50 $
PT-562	14” x 28” x 31”	43	52	197	294.00 $
PT-564*	14” x 33” x 24”	40	48	182	394.50 $
PT-566	15” x 18” x 24”	23	28	106	225.00 $
PT-568	15” x 30” x 30”	48	58	220	394.50 $
PT-570	15” x 30” x 32”	52	62	235	406.50 $
PT-572*	16” x 16” x 16”	14	17	64	124.50 $
PT-574	16” x 20” x 6”	7	8	30	90.00 $
PT-576	16” x 20” x 16”	18	22	83	157.50 $
PT-578	16” x 36” x 9”	18	22	83	202.50 $
PT-579	16” x 40” x 38”	87	105	397	564.00 $
PT-580	18” x 18” x 24”	27	33	125	237.00 $
PT-582	18” x 24” x 18”	27	33	125	237.00 $
PT-584	18” x 24” x 24”	37	44	167	282.00 $
PT-586	18” x 24” x 30”	47	56	212	316.50 $
PT-588	18” x 24” x 36”	56	67	254	394.50 $
PT-592	18” x 26” x 12”	20	24	91	202.50 $
PT-594	18” x 30” x 20”	38	46	174	339.00 $
PT-596*	18” x 36” x 24”	56	67	254	394.50 $
PT-598	18” x 36” x 30”	70	84	318	451.50 $
PT-600	20” x 20” x 30”	43	52	197	294.00 $
PT-602	20” x 24” x 24”	41	49	185	282.00 $
PT-604	20” x 24” x 36”	62	74	280	451.50 $
PT-606	20” x 26” x 23”	42	51	193	271.50 $
PT-608*	22” x 22” x 24”	42	50	189	339.00 $
PT-609	22” x 28” x 26”	57	69	261	394.50 $
PT-610	22” x 22” x 36”	62	75	284	394.50 $
PT-612	24” x 24” x 18”	37	44	167	249.00 $
PT-614	24” x 24” x 24”	49	59	223	282.00 $
PT-616	24” x 24” x 36”	74	89	337	508.50 $
PT-617	24” x 26” x 29”	65	78	295	474.00 $
PT-618	24” x 30” x 24”	62	75	284	451.50 $
PT-620	24” x 30” x 30”	77	93	352	508.50 $
PT-624*	24” x 36” x 24”	74	89	337	451.50 $
PT-625A	24” x 52” x 13”	58	70	265	508.50 $
PT-625B*	25” x 52” x 21”	98	118	447	541.50 $
PT-625C	26” x 32” x 31”	92	111	420	541.50 $
PT-626	30” x 30” x 15”	48	58	220	541.50 $
PT-628	30” x 30” x 36”	117	140	530	508.50 $
PT-630	30” x 36” x 32”	125	150	568	541.50 $
PT-631	32” x 32” x 35”	112	135	511	586.50 $
PT-632	36” x 40” x 26”	134	162	613	621.00 $
PT-634	33” x 49” x 24”	150	180	681	676.50 $
PT-700	78” x 98” x 38”	999	1200	4542	1 692.00 $

(*) Lid available.

Secondary containment basins

These basins help to satisfy environmental regulations for spill containment and protect the environment. They are very durable and impact resistant.

Molded from chemical and corrosion resistant polyethylene. They have a tapered design for nesting during shipping or storage.

- Excellent chemical and corrosion resistance and low temperature impact.
- Durable one-piece seamless construction.
- UV stabilized for sunlight protection.
- Manufactured from HDPE.
- Fittings are not supplied on tanks unless requested.

ITEM	DIMENSIONS (le. x wid. x he.)	IMP. GAL.	US GAL.	LITERS	PRICE
IRD-40	31" x 21" x 18"	40	48	180	352.50 $
IRD-90	46" x 31" x 21"	90	108	430	498.00 $
IRD-165	59" x 37" x 28"	165	198	750	762.00 $
IRD-185	69" x 44" x 25"	185	222	800	972.00 $
IRD-310	68" x 68" x 24"	310	372	1400	1 113.00 $
IRD-410	69" x 69" x 30"	410	492	1800	1 401.00 $
IRD-800	82" x 70" x 46"	800	961	3600	2 370.00 $

Rectangular sealed tanks (standard)

Made of molded polyethylene, these tanks have not been cut open or drilled. They are completely sealed. This allows for customization with the use of a drill, ripper or jigsaw. With these tanks, you can make whatever you want, like sumps, storage tanks, hauling tanks, filters, etc. The wall thickness for these tanks is 3/16". Also available: precut sump tanks (on demand).

Sealed tank

Precut sump tank (on demand)

ITEM	DIMENSIONS (le. x wid. x he.)	LITERS	WEIGHT (lbs)	PRICE
102020	24" x 16" x 12"	76	14	200.94 $
207020	16" x 18" x 16"	76	13	200.94 $
103028	21" x 18" x 18"	106	18	235.18 $
103030	30" x 12" x 20"	114	20	256.30 $
207030	42" x 10" x 16"	114	23	256.30 $
208040	27" x 17" x 20"	151	22	356.30 $
107045	44" x 16" x 16"	170	29	384.78 $
207055	32" x 20" x 20"	208	29	523.34 $
209055	42" x 15" x 20"	208	30	523.34 $
300086	31" x 24" x 28"	326	40	605.26 $
207095	55" x 18" x 22"	341	45	644.30 $
103110	89" x 14" x 21"	416	59	815.66 $
103150	65" x 29" x 20"	568	63	903.50 $
103200	85" x 20" x 28"	757	90	1 263.18 $

Fibreglass tanks

Many sizes of fibreglass tanks are available. Increase your fish stocking capacity with these self-cleaning tanks. Excellent for keeping stock of lobsters and other species. To learn more about the stocking capacity of each tanks, please contact our specialists.

Fibreglass tanks advantages:

- Self-cleaning.
- Doesn't take much space.
- High quality finish.
- Several colors available.
- Available with stand.

RT series

BSF series

BRF series

PN-FFB series

PN-FT series

PN-FTL series

ITEM	DIMENSIONS (le. x wid. x he.)	IMP. GAL.	US GAL.	LITERS	PRICE
RT-331-OT	36" x 36" x 12"	268	322	59	P.O.R.
RT-332-OT	36" x 36" x 24"	551	662	121	P.O.R.
RT-333-OT	36" x 36" x 36"	923	1108	203	P.O.R.
BSF-1	39" x 39" x 16"	87	104	396	1 074.60 $
BSF-2	78" x 78" x 21"	458	550	2095	2 544.75 $
BRF-112	48" x 36" x 18"	93	112	425	1 718.55 $
BRF-145	43" x 26" x 30"	121	145	550	1 166.99 $
BRF-150	96" x 24" x 18"	125	150	567	2 970.00 $
BRF-157	48" x 36" x 24"	131	157	595	1 884.60 $
BRF-168	72" x 36" x 18"	140	168	637	2 049.30 $
BRF-209	48" x 48" x 24"	174	209	793	2 069.55 $
BRF-225	96" x 36" x 18"	187	225	850	2 721.60 $
BRF-227	48" x 38" x 29"	191	229	865	1 655.04 $
BRF-254	72" x 48" x 20"	212	255	963	2 396.25 $
BRF-281	120" x 36" x 18"	234	281	1062	2 786.40 $
BRF-374	96" x 60" x 18"	312	375	1417	3 032.10 $
BRF-374B	120" x 48" x 18"	312	375	1417	3 114.45 $
BRF-419	96" x 48" x 24"	349	419	1586	3 036.15 $
BRF-449	144" x 48" x 18"	374	449	1700	3 728.70 $
BRF-468	120" x 60" x 18"	390	468	1771	3 441.15 $
BRF-472	144" x 36" x 24"	393	472	1785	4 248.45 $
BRF-561	120" x 72" x 18"	467	561	2125	3 728.70 $
BRF-561B	144" x 60" x 18"	467	561	2125	4 282.20 $
BRF-629	96" x 72" x 24"	524	629	2380	3 277.80 $
BRF-786	120" x 72" x 24"	654	785	2975	4 137.75 $
BRF-898	144" x 96" x 18"	748	898	3400	5 224.50 $
BRF-943	144" x 72" x 24"	785	943	3570	5 039.55 $
BRF-1268	240" x 84" x 16"	1056	1268	4800	9 542.80 $
BRF-2660	231" x 76" x 35"	2215	2660	10 069	12 354.85 $
BRF-5000	231" x 100" x 50"	4163	5000	18 927	19 883.12 $
PN-FT391	36" x 24" x 12"	32	39	148	221.26 $
PN-FT811	48" x 30" x 15"	67	81	307	563.34 $
PN-FT1221	60" x 30" x 18"	102	122	462	723.82 $
PN-FT2351	72" x 36" x 24"	225	270	1022	1 288.30 $
PN-FT5231	96" x 48" x 30"	435	523	1980	2 753.60 $
PN-FTL120	96" x 24" x 12"	100	120	454	475.02 $
PN-FTL180	96" x 36" x 12"	150	180	681	822.06 $
PN-FTL240	96" x 48" x 12"	200	240	908	1 111.34 $
PN-FTL320	96" x 48" x 16"	266	320	1211	1 541.74 $
PN-FFB122	33.5" x 7" x 10"	Filter box for PN-FT811/1221.			147.02 $
PN-FFB235	39" x 7" x 10"	Filter box for PN-FT2351.			181.26 $
PN-FFB523	53" x 10.5" x 16"	Filter box for PN-FT5231.			381.42 $

Insulated containers (dual-wall)

- Insulation factor R-18.
- Five replaceable nylon pads.
- Two-inch (5 cm) drain plugs with O-ring.
- **D337** & **D345** with 2 parts hinged lid.
- **DF1000SS** designed for air and water injection through bottom distribution (9 holes), perfect to speed up defrosting.

(A)

(B)

(C)

(D)

(E)

(F)

(G)

(H)

(I)

(J)

(K)

(L)

(M)

(N)

ITEM	DESCRIPTION	EXT. DIMENSIONS (le. x wid. x he.)	LITERS	IMP. GAL.	PRICE (with lid)
D70	2 ft³ insulated container, rope handle. **(A)**	30” x 19” x 15”	63	14	393.68 $
DB1801	9 ft³ insulated container, rope handle. **(B)**	43” x 25” x 26”	261	57	759.24 $
DX310	9 ft³ insulated container, lever handle. **(B)**	43” x 22” x 26”	261	57	759.24 $
DX310F	9 ft³ insulated container, lever handle. **(C)**	43” x 22” x 31”	261	57	759.24 $
DB1800	9 ft³ insulated container, lever handle. **(D)**	43” x 25” x 29”	261	57	759.24 $
D380	13 ft³ insulated container, rope handle. **(E)**	37” x 30” x 30”	355	78	P.O.R.
DB1745	14 ft³ insulated container, rope handle. **(C)**	48” x 43” x 26”	409	90	1 123.32 $
DB14	14 ft³ insulated container, rope handle. **(F)**	48” x 28” x 32”	409	90	1 044.88 $
D460	15 ft³ insulated container, rope handle. **(G)**	49” x 41” x 23”	418	92	1 022.68 $
DX318	18 ft³ insulated container, lever handle. **(C)**	48” x 43” x 28”	515	113	1 123.32 $
D660	23 ft³ insulated container, rubber handle. **(G)**	49” x 41” x 30”	644	142	1 136.64 $
DB1545	24 ft³ insulated container, rubber handle. **(H)**	48” x 43” x 36”	689	152	1 142.56 $
D327	25 ft³ insulated container, lever handle. **(C)**	48” x 43” x 35”	712	157	1 142.56 $
D332	28 ft³ insulated container, lever handle. **(C)**	48” x 43” x 38”	780	172	1 226.92 $
D10000	35 ft³ insulated container, rubber handle. **(G)**	58” x 46” x 35”	992	218	1 414.88 $
DF1000SS	35 ft³ defrosting container, stainless steel valves. **(I)**	58” x 46” x 35”	995	219	3 819.88 $
DX335	35 ft³ insulated container, lever handle. **(C)**	48” x 43” x 47”	999	220	1 256.52 $
DB2145	36 ft³ insulated container, rope handle. **(N)**	48” x 43” x 47”	1000	220	1 256.52 $
D337	36 ft³ insulated container, hinged lid. **(J)**	72” x 41” x 34”	1032	227	2 425.72 $
D345	42 ft³ insulated container, hinged lid. **(J)**	68” x 40” x 40”	1200	264	2 510.08 $
07-1001	10 ft³ insulated container, rubber handle. **(K)**	42” x 24” x 28”	282	62	827.50 $
07-1401	14 ft³ insulated container, rubber handle. **(K)**	49” x 29” x 33”	400	88	942.50 $
07-1801	18 ft³ insulated container, rope handle. **(D)**	48” x 43” x 29”	510	112	1 000.00 $
07-6603	21 ft³ insulated container, rope handle. **(L)**	48” x 42” x 33”	660	145	968.75 $
07-2501	25 ft³ insulated container, rope handle. **(D)**	48” x 43” x 36”	700	154	1 093.75 $
07-3201	30 ft³ insulated container, rope handle. **(D)**	48” x 43” x 43”	832	183	1 125.00 $
07-3503	35 ft³ insulated container, rope handle. **(M)**	48” x 43” x 47”	1000	220	1 153.75 $
07-4003	36 ft³ insulated container, rubber handle. **(L)**	59” x 47” x 37”	1000	220	1 206.25 $

Accessories for insulated containers:

10-9260

10-0471

10-0470

10-9261

10-0472

CE-1

C560

10-9262

10-0040

ITEM	DESCRIPTION	PRICE
10-0040	Adaptor 2” Buttress x 4” Length at 2” (SCH 80).	50.00 $
10-0470	Drain plug (Xactics).	13.13 $
10-0471	Drain plug (Saeplast).	16.44 $
10-0472	Drain plug (Bonar).	16.44 $
10-3820	Wear plates (Xactics).	15.00 $
10-9260	Rubber handle, 1 hole.	14.38 $
10-9261	Rubber handle, 3 holes.	14.38 $
10-9262	Rubber handle, 5 holes for D460/660.	10.96 $
C560	Rubber handle, “T” Bonar for DB1545.	12.64 $
C650S	Wear plates, small size (Saeplast).	10.96 $
C650L	Wear plates, large size (Saeplast).	13.52 $
C465	Adhesive seal “D” 3/4” (sold by the foot).	9.60 $ / ft
CE-1	Watertight seal for lid (sold by the foot).	5.00 $ / ft

Hauling tanks

Designed for full-size pickup. Suitable for new boxes dimensions. Durable polyethylene with UV inhibitors. Decentered opening (we can modify if necessary). The **04-3250** and **04-4250** models have a 2” drain.

We can build hauling tanks based on your needs, while respecting your budget (price upon request).

PU series

04-3250
04-4250

04-1500

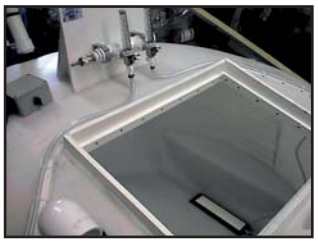

ITEM	OPEN.	DIMENSIONS (wi. x he. x le.)	LITERS	US GAL	PRICE
04-3250	8”	62” x 33”	1227	325	639.28 $
04-1500	15”	62” x 59” x 30”	1578	417	1 722.55 $
04-4250	8”	62” x 39”	1614	426	720.00 $
PU020052	8”	52” x 52” x 30”	768	203	741.00 $
PU035062	8”	62” x 62” x 34”	1330	351	1 037.40 $
PU045062	8”	62” x 62” x 41”	1709	451	1 204.20 $

Hauling tank sets

Aquamerik offers you the possibility to set up your own fish transportation system designed for your needs. Fish transportation is a risky operation and can cost a lot of money when there is several difficulties to be found due to a lack of oxygen, breaking or bad degassing. Our systems offer the insurance of high quality seeding, simplicity of use for the equipments, accuracy and economy in oxygen consumption for maximum performance.

Different options are available depending of your needs. The images below give you an overview from one of many tanks assembly projects we have done in the past. Several equipment units can be added or removed for the final assembly in order to answer your expectations. An Aquamerik expert will be pleased to help you elaborate the system you need.

Prices upon request.

Final result of a transportation tank set

Air distribution control panel